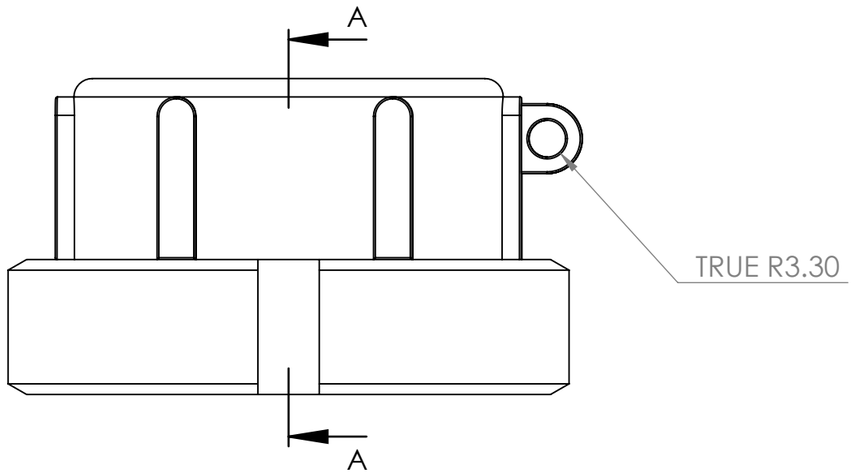

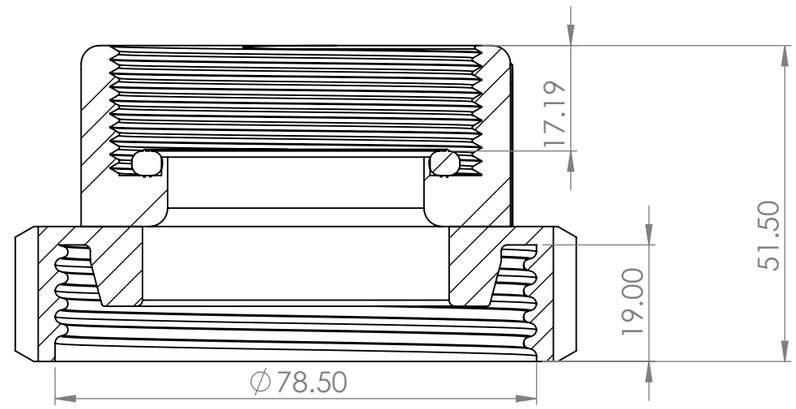

SECTION A-A

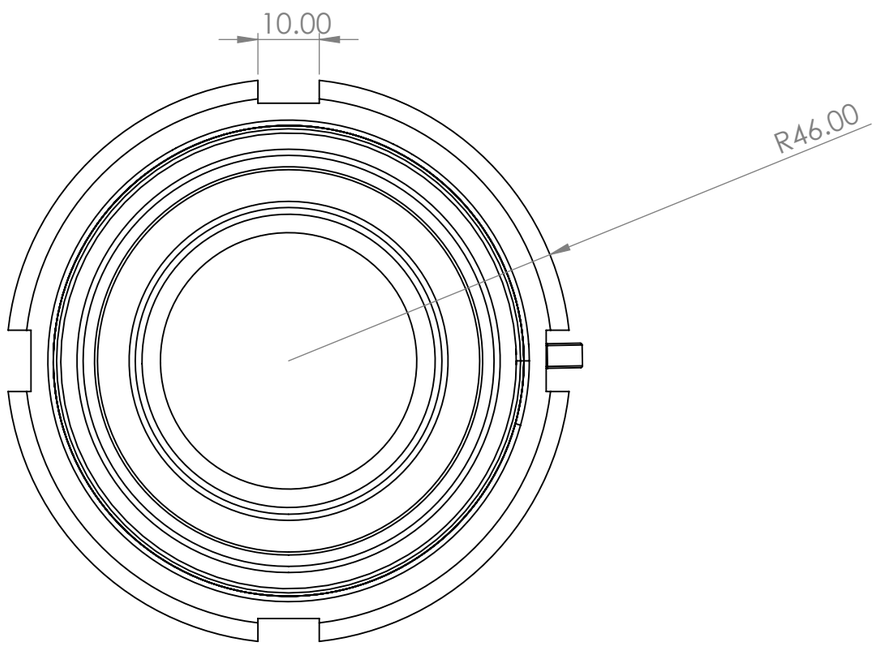

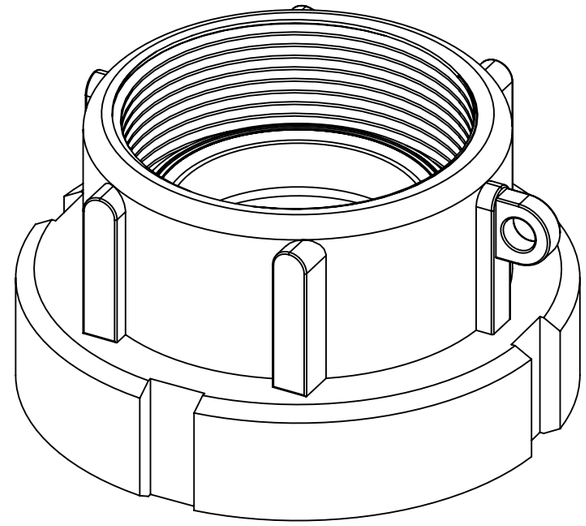

UNLESS OTHERWISE SPECIFIED: DIMENSIONS ARE IN MILLIMETERS SURFACE FINISH: TOLERANCES: LINEAR: ANGULAR:	FINISH:				DEBURR AND BREAK SHARP EDGES	DO NOT SCALE DRAWING / REVISION
						CPP-LM.com
	NAME	SIGNATURE	DATE			TITLE: 2" BSP Female x RD78 Female (DIN 11851)
DRAWN	JULIAN TROUGHT		30.05.20			
CHK'D						
APPV'D						
MFG						
Q.A				MATERIAL: POLYPROPYLENE		DWG NO. HFFB-20B78RD-027 / A3
				WEIGHT:		SCALE:1:1 / SHEET 1 OF 1